ELECTRICAL SPECIFICATIONS				
MAIN POWER	200-230VAC 1HP/1PHASE 8.8 AMPS	230-240VAC 1HP/3PHASE 3.6AMPS	460VAC 1HP/3PHASE 1.8AMPS	575VAC 2HP/3PHASE 1.4AMPS
CONTROL POWER		115-120VAC 15 AMPS		

WATER SPECIFICATIONS		
TYPE	CONNECTION	DESCRIPTION
FRESH WATER SUPPLY R.O. SYS	3/4" HOSE BARB 72" A.F.F.	7GPM @ 40PSI (min)
PRODUCT WATER	1/2" TUBE/PIPE PVC, CPVC, PEX STAINLESS STEEL	3.4GPM @ 60PSI
REJECT WATER	1/2" HOSE BARB	1.5GPM @ 60PSI

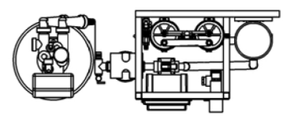

TOP VIEW

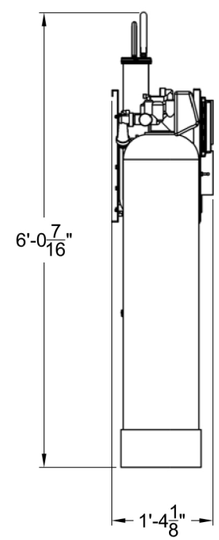

LEFT SIDE VIEW

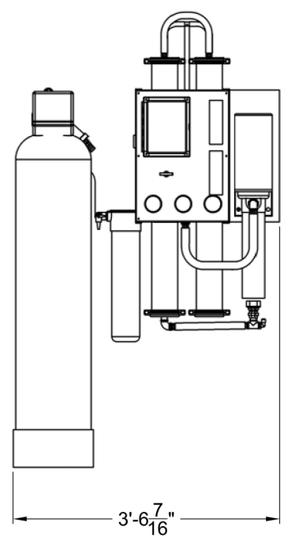

FRONT VIEW

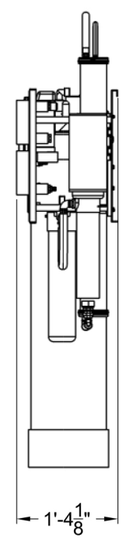

RIGHT SIDE VIEW

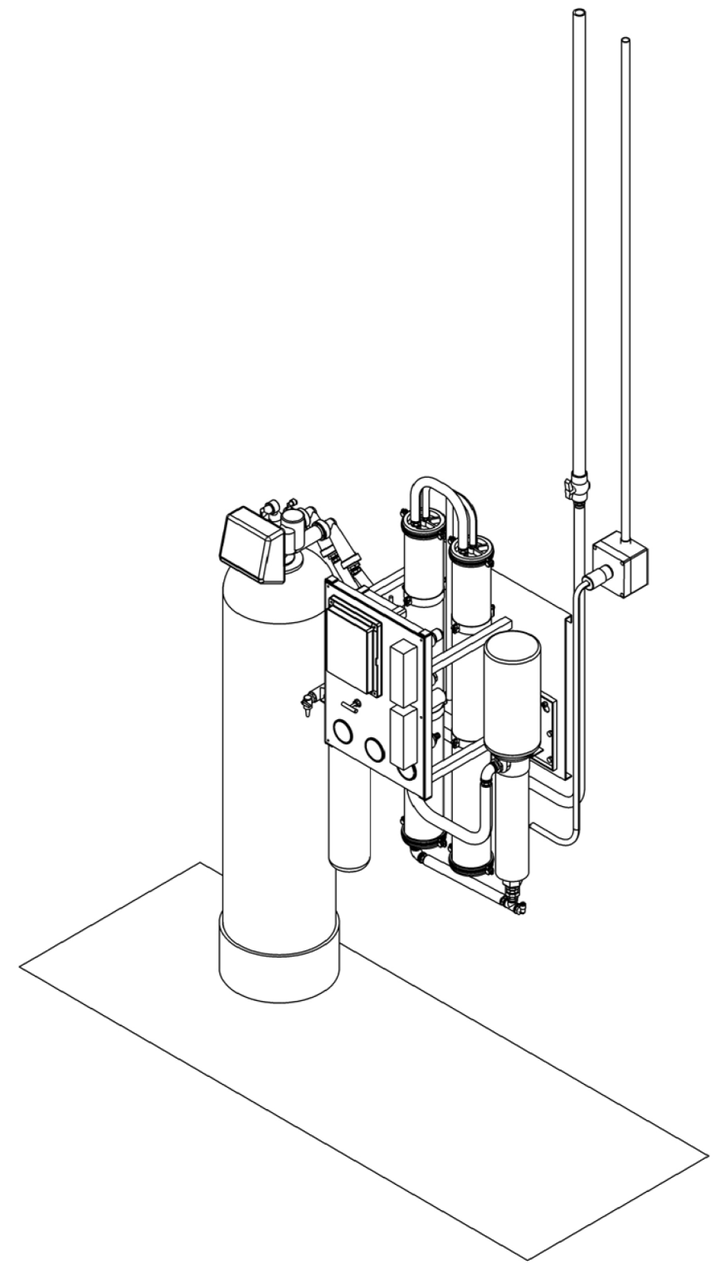

ELECTRICAL NOTES

1. ALL ELECTRICAL MATERIALS USED IN THE INSTALLATION OF THIS EQUIPMENT IS TO BE IN COMPLIANCE WITH UL/CSA STANDARDS. ALL WIRING METHODS AND PROTECTIVE DEVICES TO BE PER THE NATIONAL ELECTRICAL CODE, OR LOCAL ELECTRICAL CODES, WHICH EVER HAS THE HIGHER LEVEL OF ACCEPTABILITY.

2. ALL EXPOSED CONDUITS AND FITTINGS IN THE EQUIPMENT ROOM AND WASH BAY SHALL BE SCHEDULE 40 PVC UNLESS OTHERWISE SPECIFIED BY OWNERS ENGINEER OR LOCAL ELECTRICAL CODE. ALL ENCLOSURES TO BE NON-METALIC WITH A MINIMUM NEMA RATING OF 4X UNLESS OTHERWISE SPECIFIED BY OWNERS ENGINEER OR LOCAL ELECTRICAL CODE. IT IS THE RESPONSIBILITY OF THE ELECTRICAL CONTRACTOR TO VERIFY OWNERS MATERIAL REQUIREMENT AS WELL AS FOLLOW ANY AND ALL LOCAL CODES WHEN PROVIDING THE BID FOR THE PROJECT.

3. PANEL/JUNCTION BOX PENETRATIONS IN WET ENVIRONMENT TO BE ONLY FROM THE BOTTOM. SEAL CONDUIT PENETRATIONS WITH APPROPRIATE BOX CONNECTOR OR SEALING RING TO MAINTAIN NEMA-4X RATING.

4. EACH CONDUIT WITH CURRENT CARRYING CONDUCTORS SHALL HAVE A COPPER EQUIPMENT GROUNDING CONDUCTOR SIZED IN ACCORDANCE WITH NEC250.

5. POWER CABLES, WHEN ALLOWED BY CODE AND CUSTOMER, TO BE USED IN CONJUNCTION WITH A CABLE TRAY SHALL BE APPROPRIATE FOR THE APPLICATION, AND VOLTAGE, WITH A JACKET SUITABLE FOR USE IN A WET ENVIRONMENT THAT MAY ALSO HAVE CHEMICALS AND OILS TYPICAL OF A CARWASH ENVIRONMENT. IT IS THE RESPONSIBILITY OF THE ELECTRICAL CONTRACTOR TO CONFIRM USE OF SUCH IN THIS APPLICATION PER LOCAL ELECTRICAL CODES. IT IS ALSO THE RESPONSIBILITY OF THE ELECTRICAL CONTRACTOR TO SUBMIT ALTERNATIVE METHOD TO VELOCITY WATER WORK AND OR OWNER SHOULD ONE BE REQUIRED PER CODE OR OWNERS ENGINEER.

6. ELECTRICAL CONTRACTOR TO PROVIDE AND INSTALL SWITCHABLE DISCONNECTS FOR MOTOR LOADS EVEN THOUGH THEY ARE NOT CALLED OUT IN THE DRAWINGS BUT ARE REQUIRED BY CODE.

7. CURRENT CARRYING CONDUCTORS TO BE SIZED IN ACCORDANCE WITH THE APPLICATION, VOLTAGE, AND CONNECTED LOAD PER THE NATIONAL ELECTRICAL CODE. COLOR CODE FOR CONDUCTORS SHALL BE AS FOLLOWS:

MILLER LEAMAN

MILLER-LEAMAN INC.

ML-VROW-2 REVERSE OSMOSIS SYSTEM

WALL MOUNT 4,800 GALLON PER DAY